REVISION HISTORY			
REV	DESCRIPTION	DATE	APPROVED

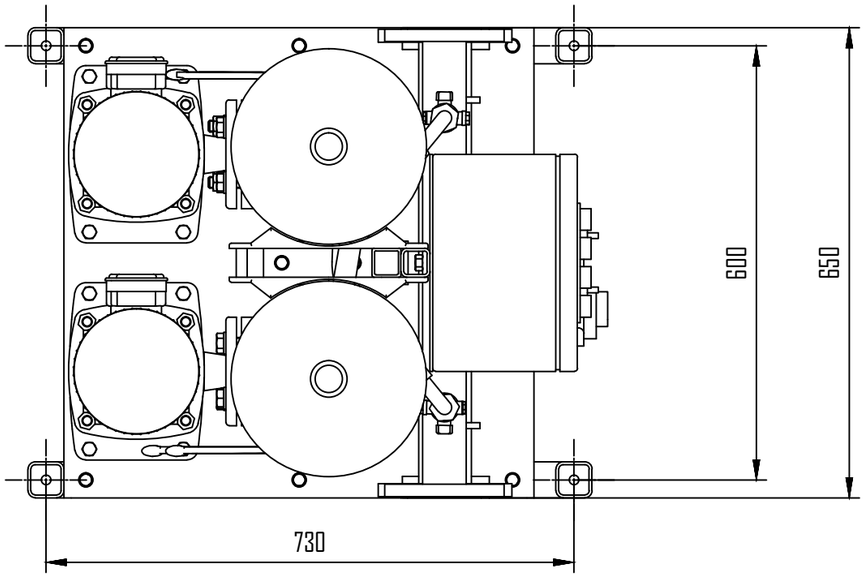

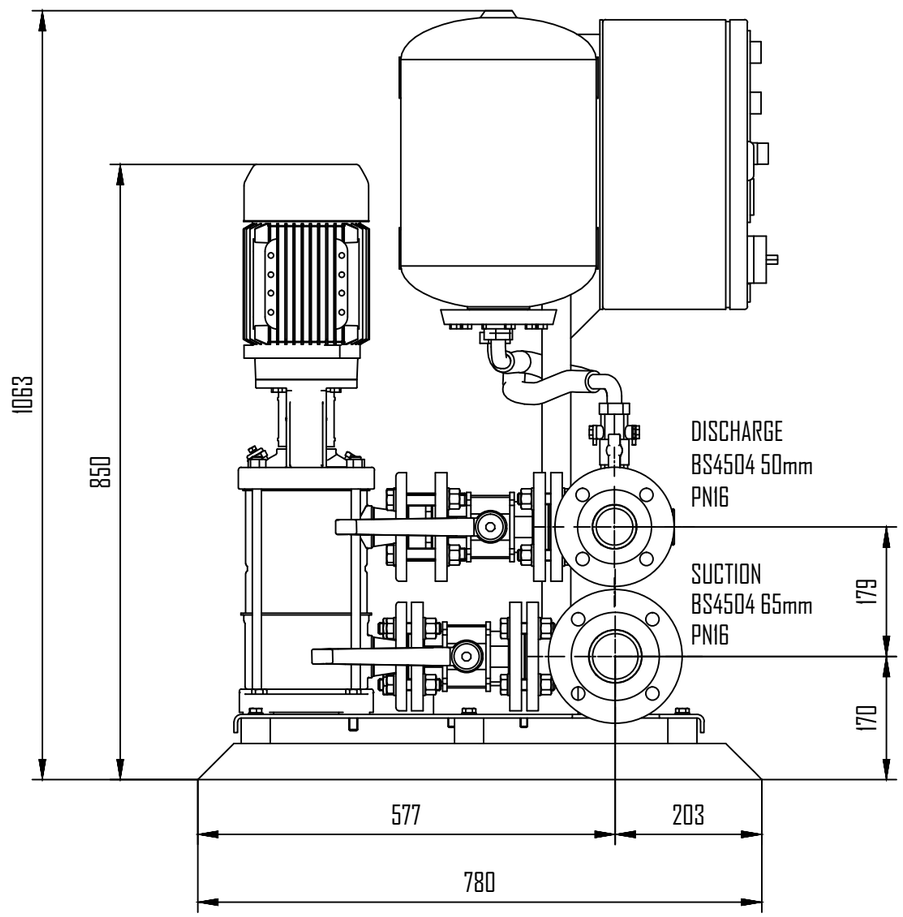

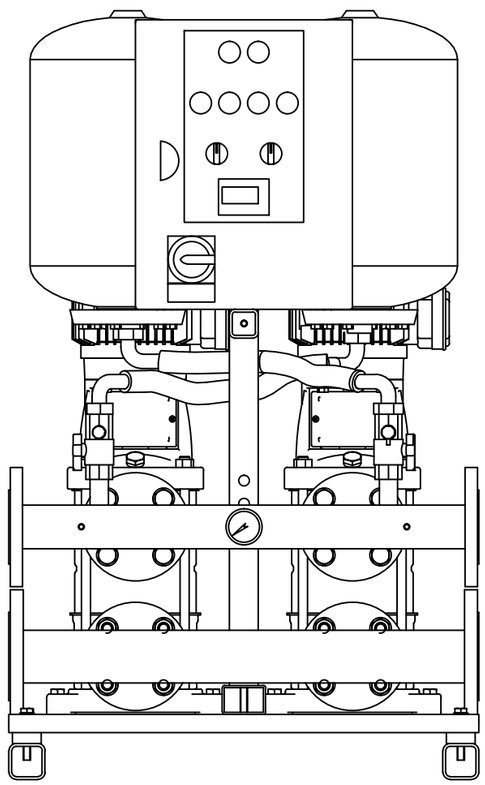

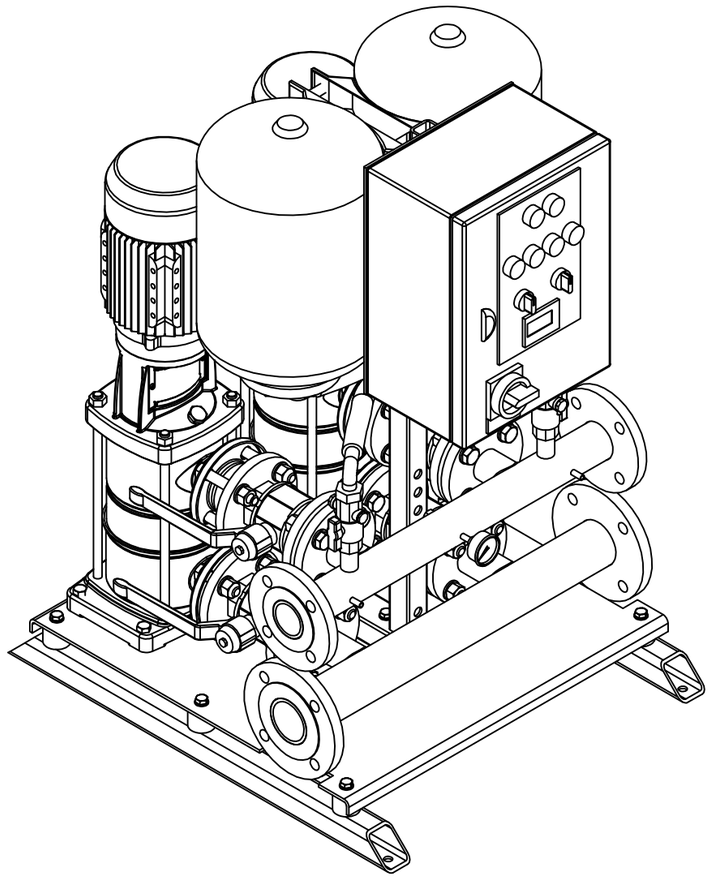

	NAME	DATE
DRAWN	nigel	23/02/12
CHECKED		
ENG APPR		
MGR APPR		

UNLESS OTHERWISE SPECIFIED
DIMENSIONS ARE IN MILLIMETERS
ANGLES ±X.X°
2 PL ±X.XX 3 PL ±X.XXX

Dutypoint Systems

TITLE

SIZE	DWG NO	REV
A3	FR2-1003-LTM	

FILE NAME: FR2-1003-LTM.dft

SCALE:	WEIGHT:	SHEET 1 OF 1