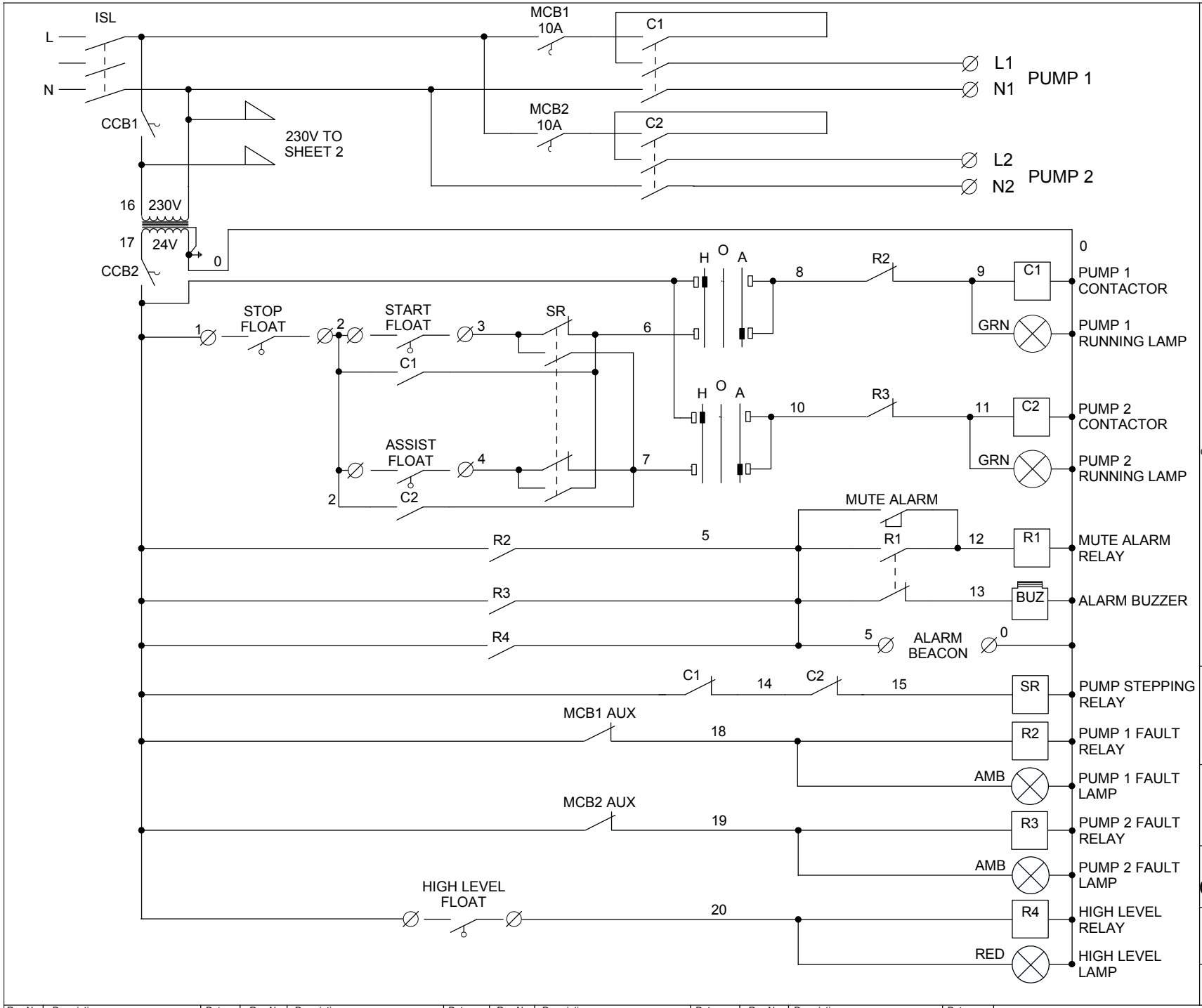

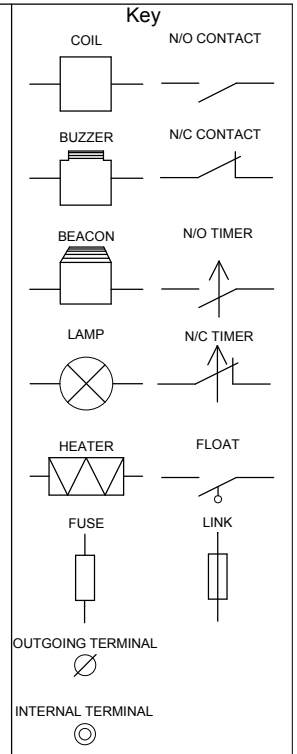

DUTYPOINT
TEL: 01452 300110
FAX: 01452 303691

CK13M/SMS
230v

Drawing No	Drawn by
CK13MSMS	G.L.
Job No	Checked by T.B.
Sheet No 1 off 3	Date 27/01/16

Rev No	Description	Date	Rev No	Description	Date	Rev No	Description	Date	Rev No	Description	Date

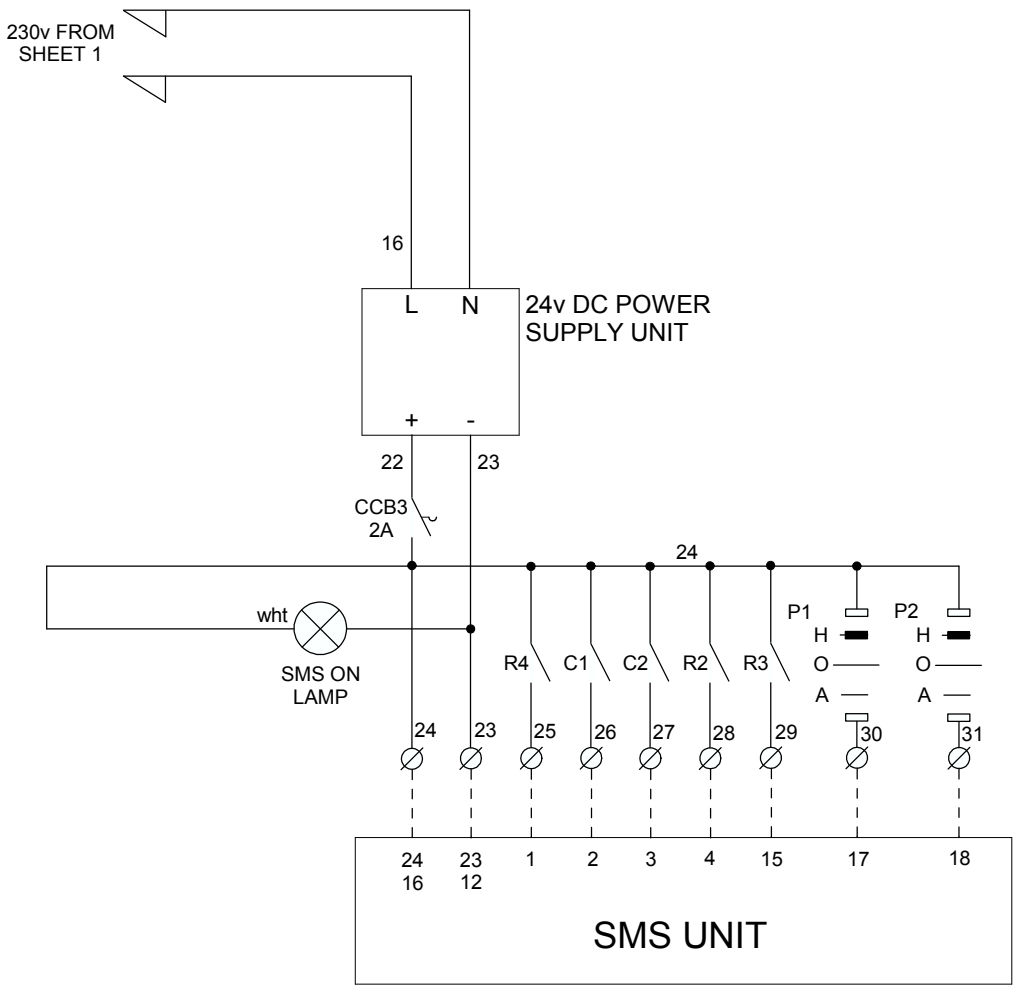

ENCLOSURE
DIMENSIONS

HEIGHT: 460
WIDTH: 380
DEPTH: 180

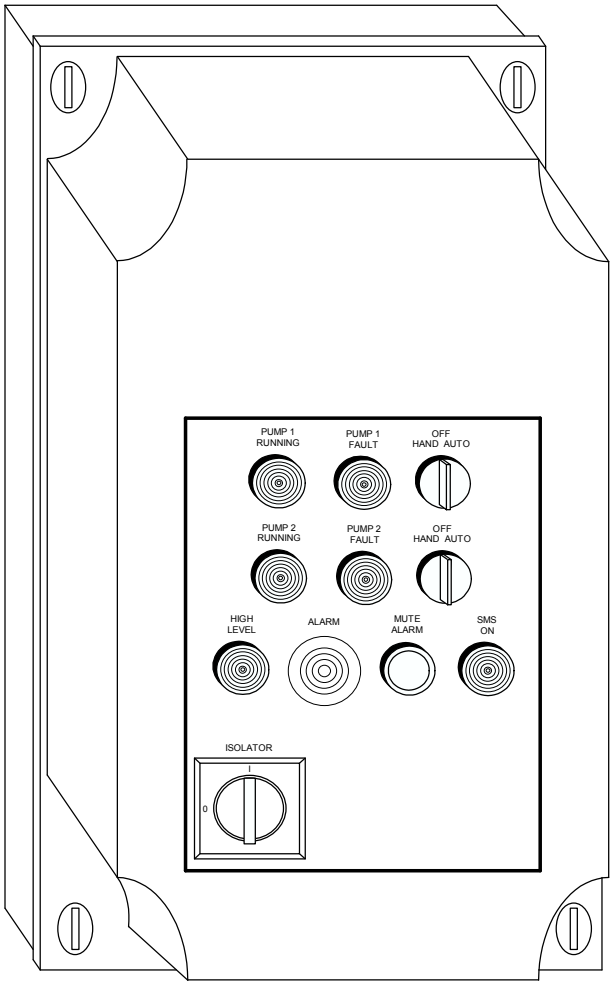

Key

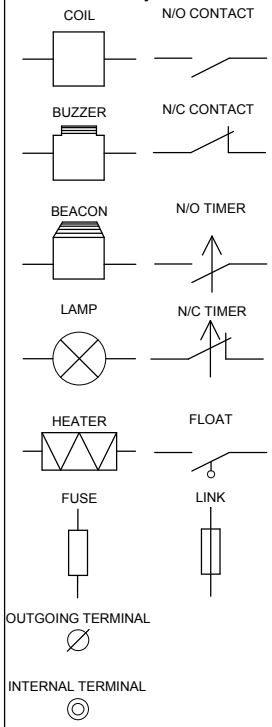

DUTYPOINT
TEL: 01452 300110
FAX: 01452 303691

CK13M/SMS
230v

Drawing No	Drawn by
CK13MSMS	G.L.
Job No	Checked by T.B.
Sheet No 2 off 3	Date 27/01/16

Rev No	Description	Date	Rev No	Description	Date	Rev No	Description	Date	Rev No	Description	Date

ESPS-200 FLOATS OPERATION

L1	N1	E	L2	N2	E	1	2	2	3	2	4	1	20	0	6
PUMP 1			PUMP 2			RED	WHITE	WIRE LINK		BLANK	BLACK	GREEN	ORANGE	REM 24V AC ALARM	

STANDARD FLOATS OPERATION

PLEASE NOTE!
FOUR FLOAT SYSTEM CONNECT AS SHOWN

THREE FLOAT SYSTEM CONNECT AS FOLLOWS
STOP = 1 & 2
DUTY = 2 & 3
ASSIST / HIGH LEVEL = 2 & 4 WITH WIRE LINK FROM 4 - 20

TWO FLOAT SYSTEM CONNECT AS FOLLOWS
STOP / DUTY = 1 & 2 & LINK 2 & 3
ASSIST / HIGH LEVEL = 2 & 4 WITH WIRE LINK FROM 4 - 20

L1	N1	E	L2	N2	E	1	2	2	3	2	4	1	20	0	6
PUMP 1			PUMP 2			STOP		DUTY		ASSIST/ STD BY		HIGH LEVEL		REM 24V AC ALARM	
						FLOATS									

Key

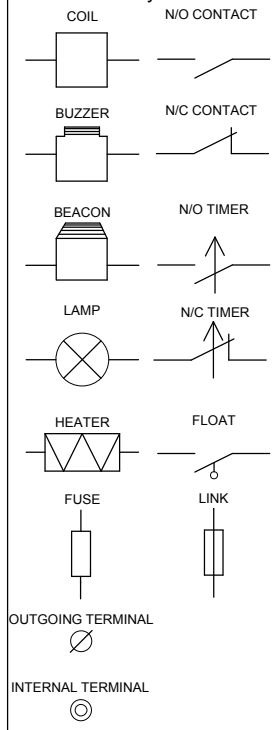

DUTYPOINT
TEL: 01452 300110
FAX: 01452 303691

CK13M/SMS
230v

Drawing No	Drawn by
CK13MSMS	G.L.
Job No	Checked by T.B.
Sheet No 3 off 3	Date 27/01/16

Rev No	Description	Date	Rev No	Description	Date	Rev No	Description	Date	Rev No	Description	Date