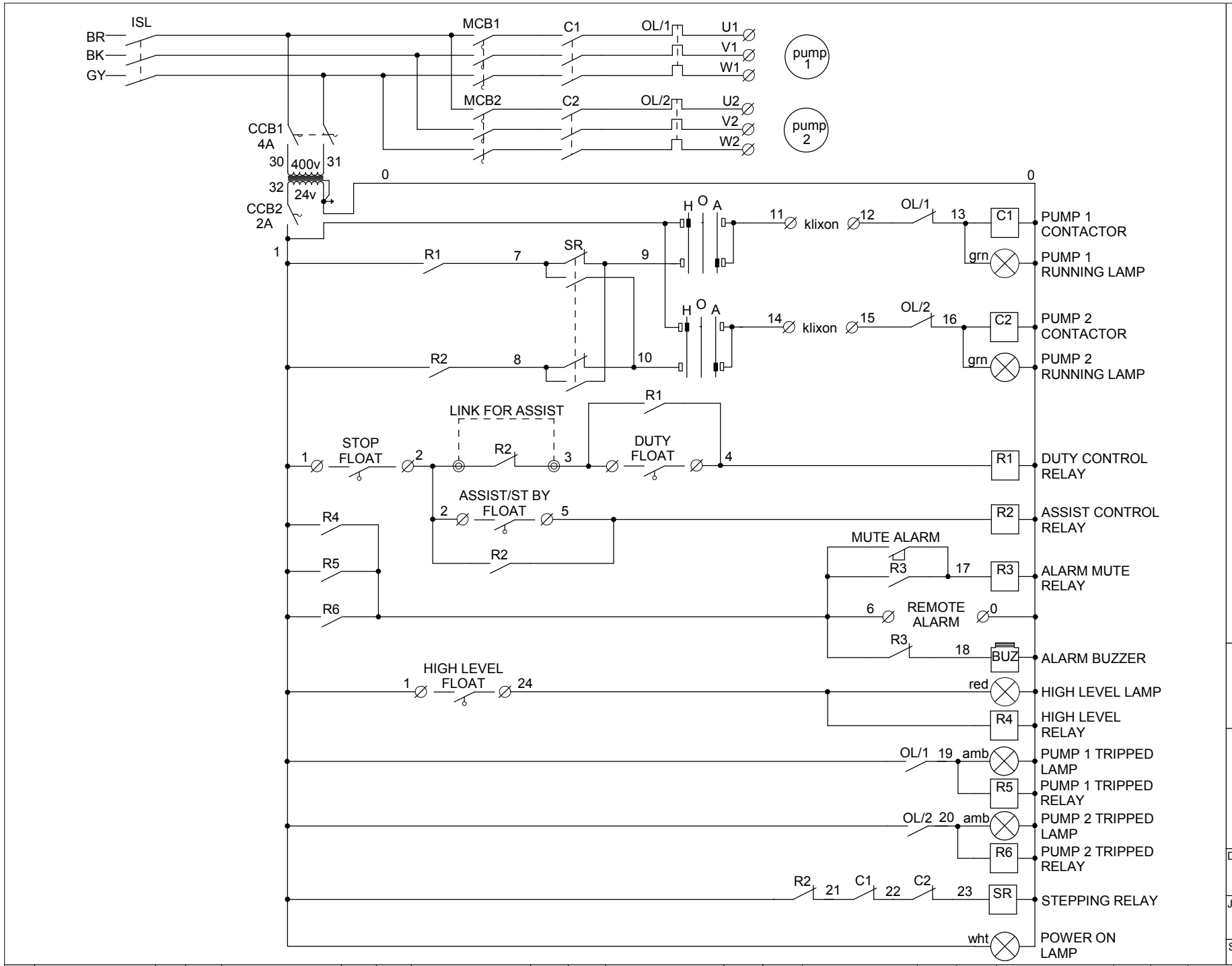


Key

COIL
N/O CONTACT
BUZZER
N/C CONTACT
BEACON
N/O TIMER
LAMP
N/C TIMER
HEATER
FLOAT
FUSE
LINK
OUTGOING TERMINAL
INTERNAL TERMINAL

DUTYPOINT
TEL: 01452 300110
FAX: 01452 303691

CK19T
400v

| Drawing No | Drawn by |
|---|---|
| CK19T | G.L. |
| Job No | Checked by T.B. |
| Sheet No 1 / 2 | Date 25/01/16 |

| Rev No | Description | Date | Rev No | Description | Date | Rev No | Description | Date | Rev No | Description | Date | Rev No | Description | Date | Rev No | Description | Date | Rev No | Description | Date |
|---|---|---|---|---|---|---|---|---|---|---|---|---|---|---|---|---|---|---|---|---|

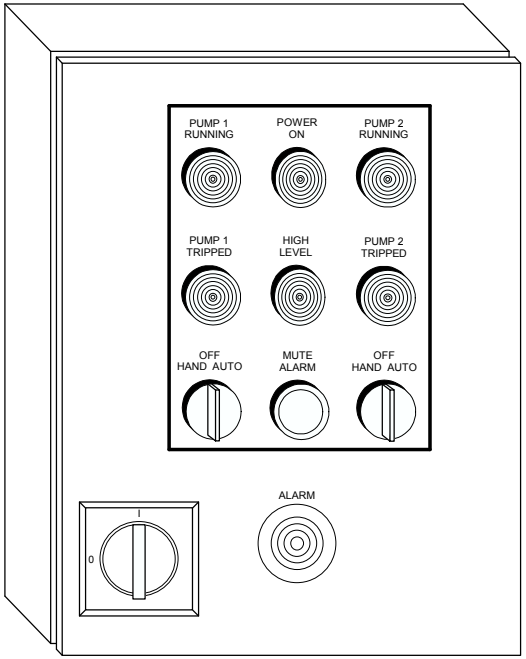


# ESPS-200 FLOAT OPERATION

PLEASE NOTE:
SHOULD DUTY STAND BY
BE REQUIRED REMOVE
WIRE LINK FROM
CONNECTIONS 2 & 3

| U1 | V1 | W1 | 11 | 12 | E | U2 | V2 | W2 | 14 | 15 | E | 1 | 2 | 3 | 4 | 2 | 5 | 1 | 24 | 2 | 3 | 0 | 6 | 40 | 41 | 42 | 43 | 44 | 45 |
|---|---|---|---|---|---|---|---|---|---|---|---|---|---|---|---|---|---|---|---|---|---|---|---|---|---|---|---|---|---|
| PUMP 1 | | | KLIXON | | | PUMP 2 | | | KLIXON | | | RED | WHITE | WIRE LINK | | BLANK | BLACK | GREEN | ORANGE | LINK FOR ASSIST | | REM 24V AC ALARM | | VOLT FREE CONTACTS | | | | | |

ENCLOSURE SIZE
HEIGHT: 600
WIDTH: 400
DEPTH: 200

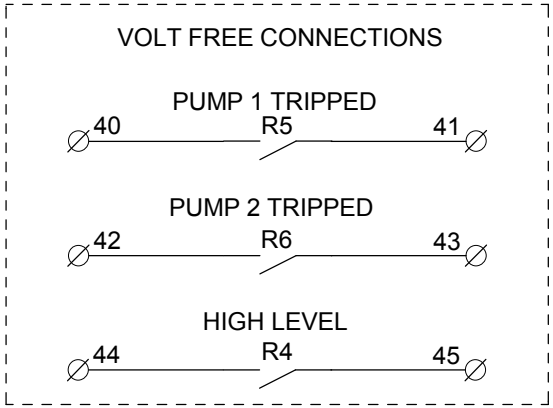


# STANDARD FLOAT OPERATION

PLEASE NOTE!
FOUR FLOAT SYSTEM CONNECT AS SHOWN

THREE FLOAT SYSTEM CONNECT AS FOLLOWS
STOP = 1 & 2
DUTY = 3 & 4
ASSIST / HIGH LEVEL = 2 & 5 WITH WIRE LINK FROM 5 - 24

TWO FLOAT SYSTEM CONNECT AS FOLLOWS
STOP / DUTY = 1 & 2 & LINK 3 & 4
ASSIST / HIGH LEVEL = 2 & 5 WITH WIRE LINK FROM 5 - 24

PLEASE NOTE:
SHOULD DUTY STAND BY
BE REQUIRED REMOVE
WIRE LINK FROM
CONNECTIONS 2 & 3

| U1 | V1 | W1 | 11 | 12 | E | U2 | V2 | W2 | 14 | 15 | E | 1 | 2 | 3 | 4 | 2 | 5 | 1 | 24 | 2 | 3 | 0 | 6 | 40 | 41 | 42 | 43 | 44 | 45 |
|---|---|---|---|---|---|---|---|---|---|---|---|---|---|---|---|---|---|---|---|---|---|---|---|---|---|---|---|---|---|
| PUMP 1 | | | KLIXON | | | PUMP 2 | | | KLIXON | | | STOP | | DUTY | | ASSIST/ STD BY | | HIGH LEVEL | | LINK FOR ASSIST | | REM 24V AC ALARM | | VOLT FREE CONTACTS | | | | | |
| | | | | | | | | | | | | FLOATS | | | | | | | | | | | | | | | | | |

Key

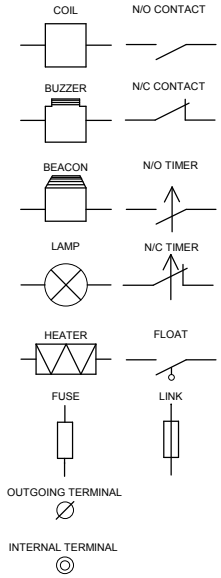


DUTYPOINT
TEL: 01452 300110
fAX: 01452 303691

CK19T
400v

| Drawing No | Drawn by |
|---|---|
| CK19T | G.L. |
| Job No | Checked by T.B. |
| Sheet No 2 / 2 | Date 25/01/16 |

| Rev No | Description | Date | Rev No | Description | Date | Rev No | Description | Date | Rev No | Description | Date | Rev No | Description | Date | Rev No | Description | Date |
|---|---|---|---|---|---|---|---|---|---|---|---|---|---|---|---|---|---|