REVISION HISTORY			
REV	DESCRIPTION	DATE	APPROVED

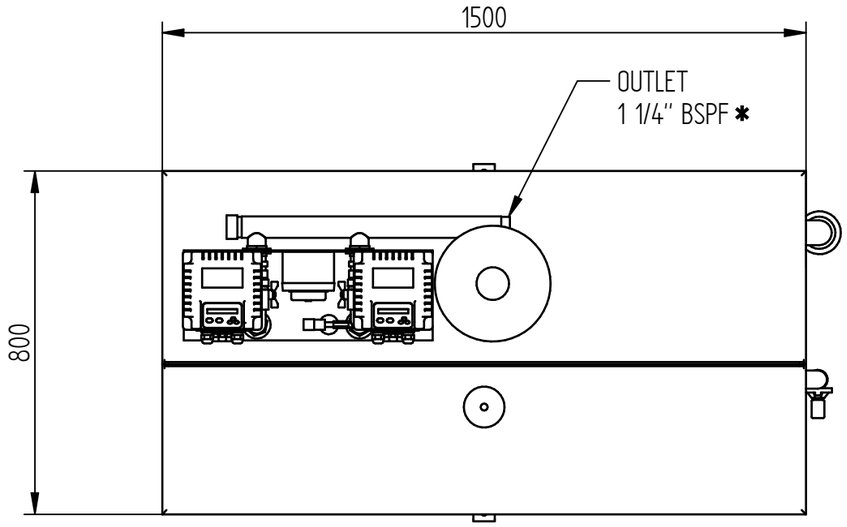

* SIZES MAY INCREASE TO 2" FOR HIGH FLOW UNITS

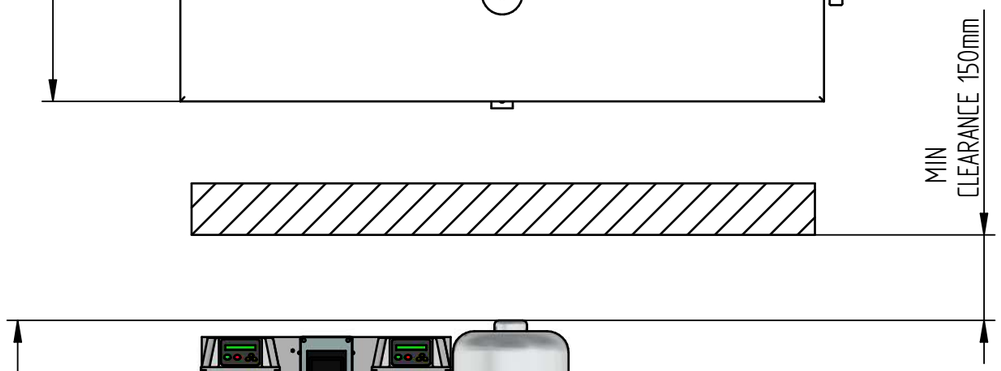

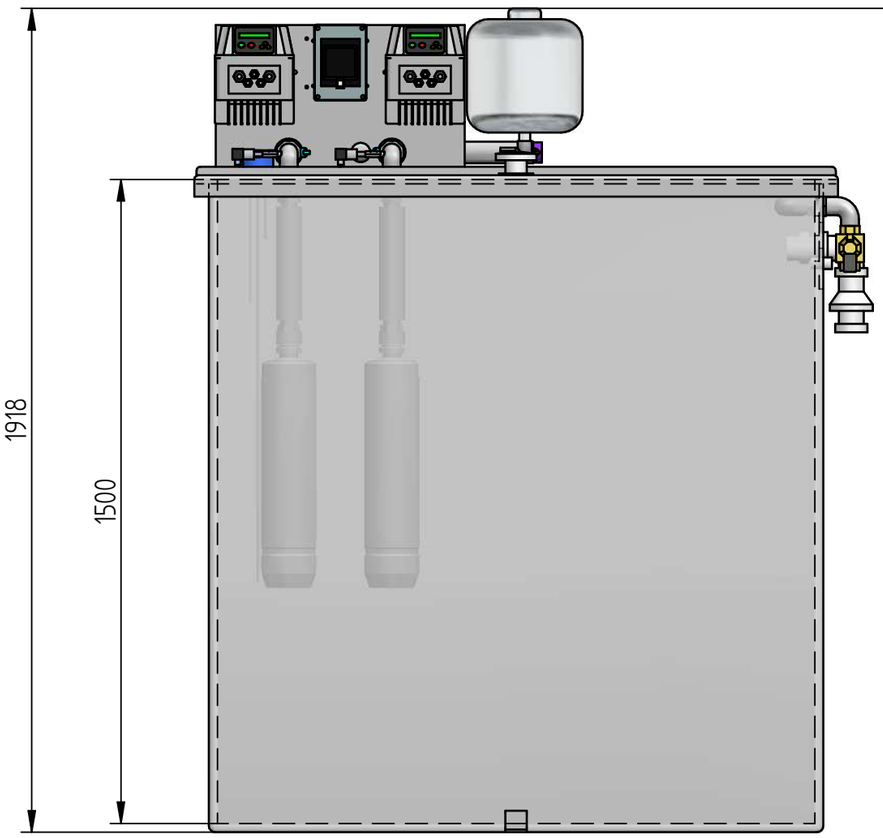

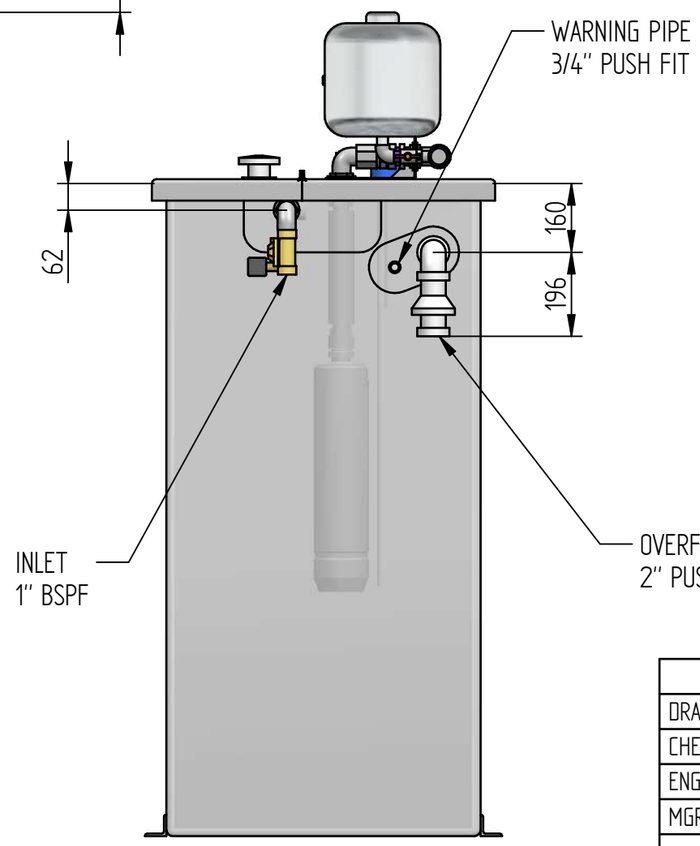

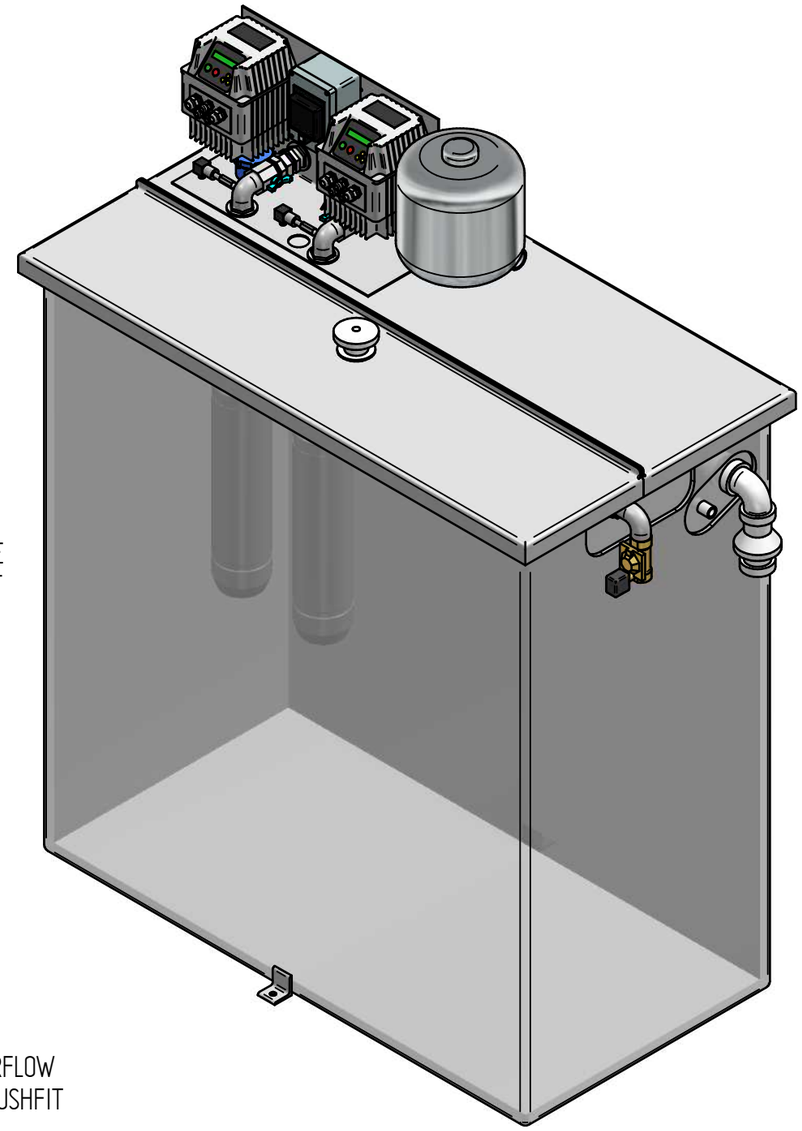

	NAME	DATE
DRAWN	nigel	05/03/13
CHECKED		
ENG APPR		
MGR APPR		

UNLESS OTHERWISE SPECIFIED
DIMENSIONS ARE IN MILLIMETERS
ANGLES ±X.X°
2 PL ±X.XX 3 PL ±X.XXX

Dutypoint Systems

TITLE: SCUBATANK 1050 DOUBLE

SIZE: A3 | DWG NO: SCUBATANK 1050 DOUBLE | REV

FILE NAME: SCUBATANK 1050 DOUBLE.dft

SCALE: | WEIGHT: | SHEET 1 OF 1