REVISION HISTORY			
REV	DESCRIPTION	DATE	APPROVED

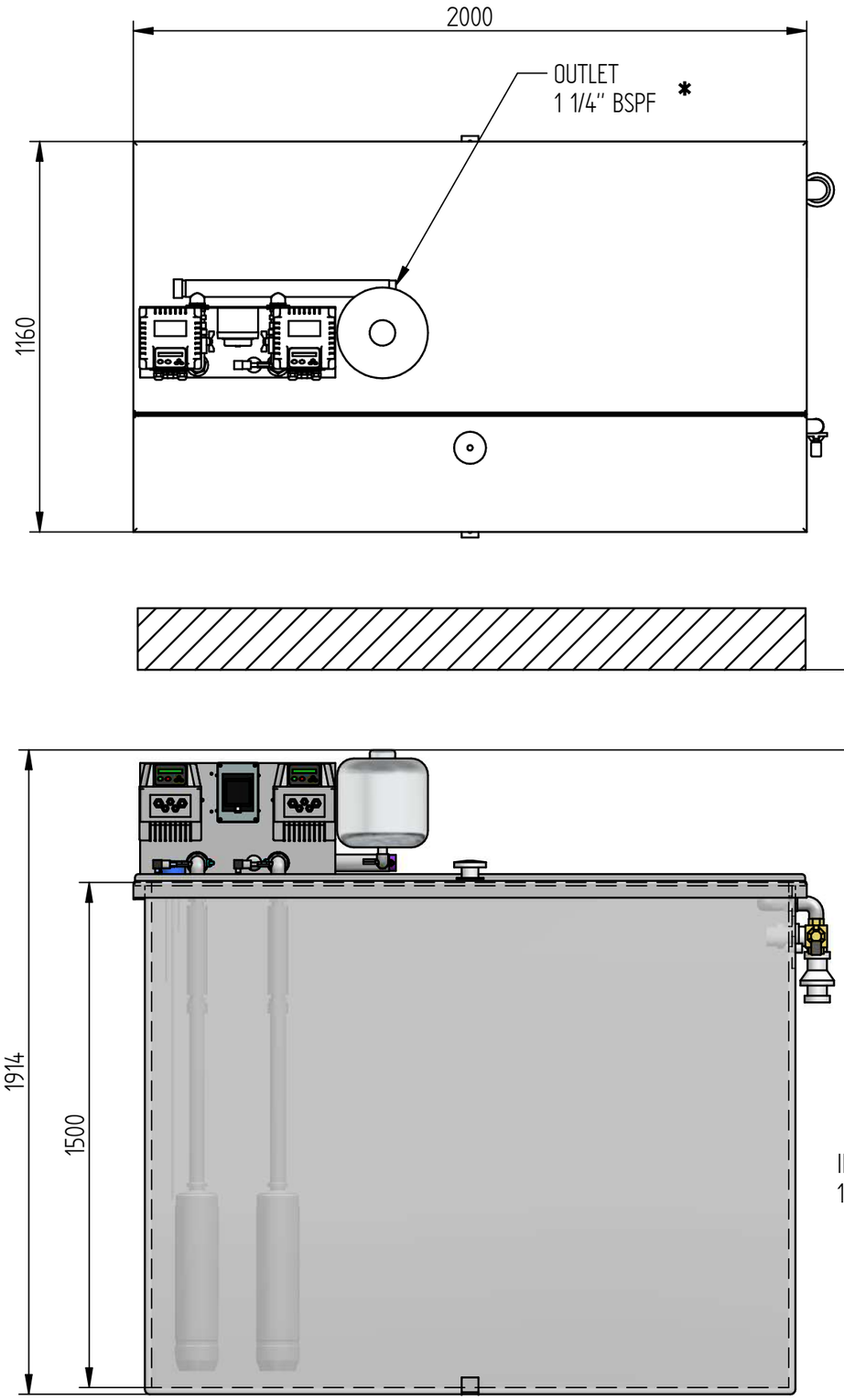

* SIZES MAY INCREASE TO 2" FOR HIGH FLOW UNITS

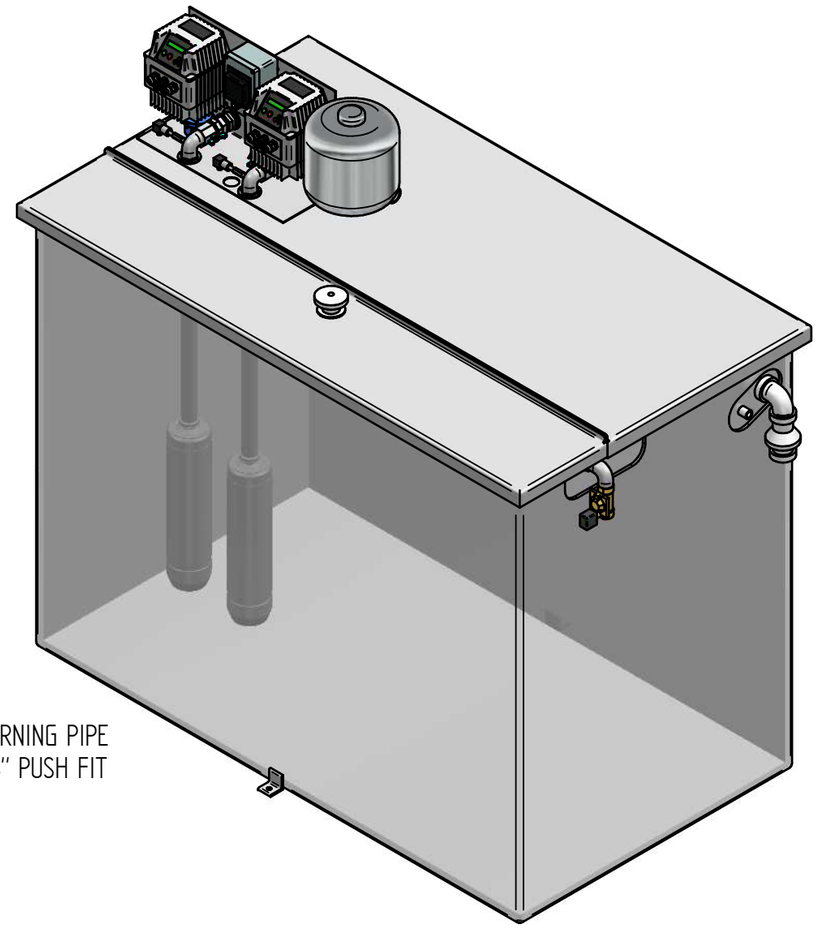

	NAME	DATE
DRAWN	nigel	05/03/13
CHECKED		
ENG APPR		
MGR APPR		

UNLESS OTHERWISE SPECIFIED
DIMENSIONS ARE IN MILLIMETERS
ANGLES ±X.X°
2 PL ±X.XX 3 PL ±X.XXX

Dutypoint Systems

TITLE: SCUBATANK 2250 DOUBLE

SIZE	DWG NO	REV
A3	SCUBATANK 2250 DOUBLE	

FILE NAME: SCUBATANK 2250 DOUBLE.dft

SCALE:	WEIGHT:	SHEET 1 OF 1