ScubaTANK.

PRODUCT DATA SHEET
SCUBATANK

WX1-5040-1250-AB

Product Description

Dutypoint Systems ScubaTANK - Combined WRAS Approved storage tank with Category 5 type 'AB' air gap and variable speed single pump booster set package. Free-standing unit comprising an insulated tank with approximately 1,250 litres actual storage, stainless steel multistage submersible pump, inverter drive and isolation panel with low level protection and common fault VFC. Unit also includes isolation and non-return valve and stainless steel pressure vessel and a 0.75 Inch high flow solenoid inlet valve.

WRAS APPROVED PRODUCT

PUMP CURVE

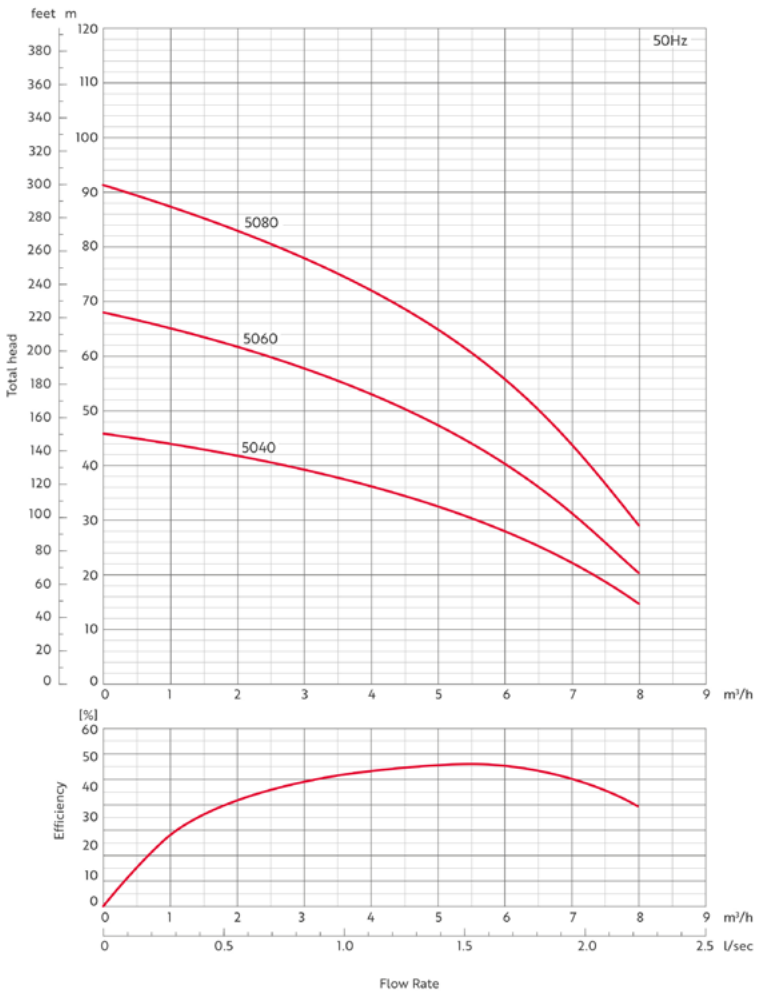

SPECIFICATION

Weight (if known) (kg)	146.5
Voltage	230/1/50
Suction Size	3/4" BSP
Discharge Size	1 1/4" BSP
Max Head (m)	46
Max Flow (l/s)	2.2
Motor Speed (rpm)	2900
IP Rating	IP54
Motor KW	0.75
Full Load Current (A)	5
Number Of Pumps	1
Drive Type	Variable Speed with Inverter for Each Pump
Pump Model	XPW5040-T230
Pressure Vessel	1 x 12 ltr

ADDITIONAL INFORMATION

For DWG, BIM, wiring diagrams and consultant spec-sheets, please visit:

www.dutypoint.com/specifier-zone

01452 300110 | ENQUIRIES@DUTYPOINT.COM

DIMENSIONAL DRAWING

Please Note: A clearance of 150mm is reaquired above the installed unit for servicing.

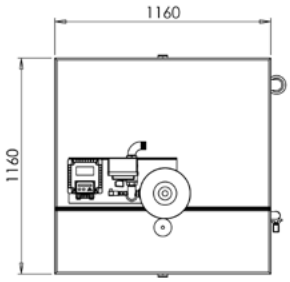

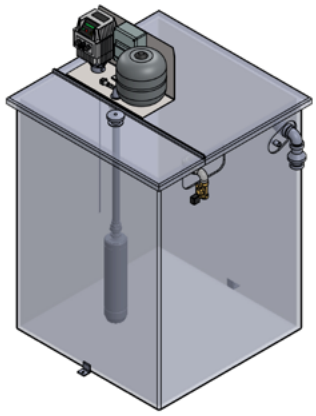

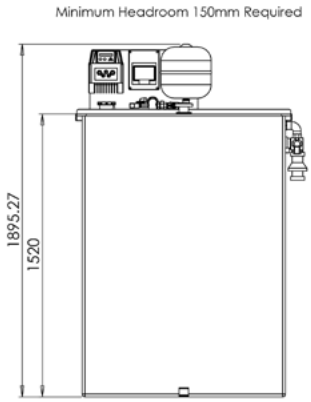

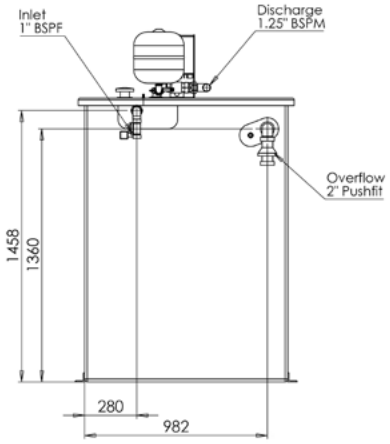

SCUBATANK MODEL CODES

WX2 - 5040 - 490 - AB - HS - RM/2

- Product Prefix
- Number of Pumps
- Pump Model
- Tank Actual Capacity *(litres)*

OPTIONS

AB: Category 5 AB air gap
HS: Horizontally split tank
RM: Control panel supplied loose for remote mounting
/2: Twin Tank System

SCUBATANK COMPONENTS

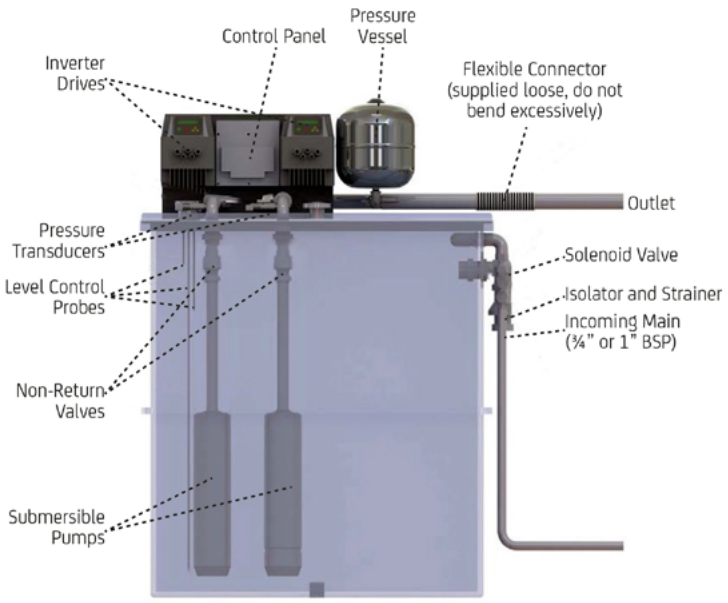

DUTYPOINT STANDARD WARRANTY

Your Dutypoint Systems standard product warranty is valid for a period of 12 months from date of delivery.

If you need to contact us regarding your warranty or any issue regarding your Dutypoint product, please contact our service department.

01452 300590

service@dutypoint.com

dutypoint.com/service

DUTYPOINT SETTING THE BAR