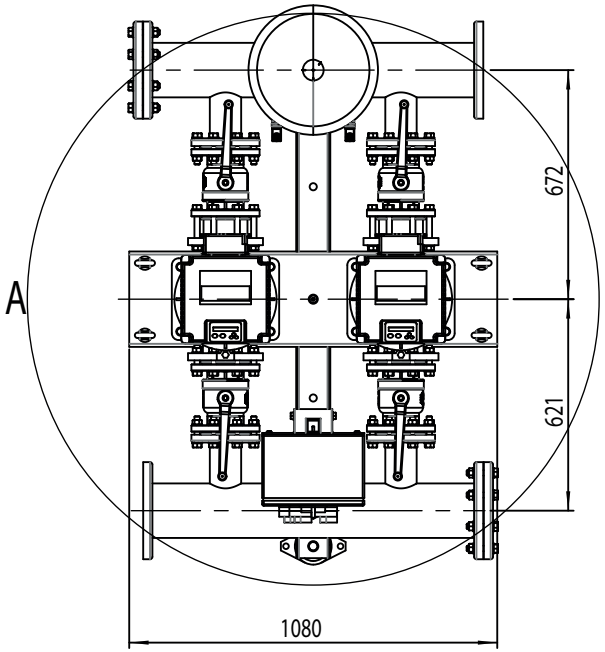

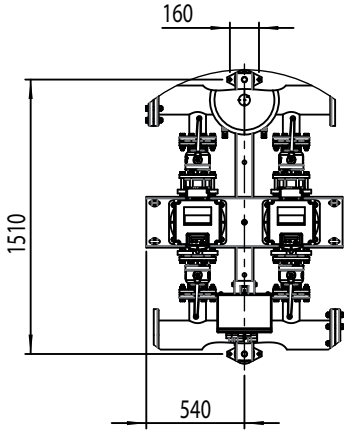

DETAIL A SHOWING BASE FASTENING LOCATIONS

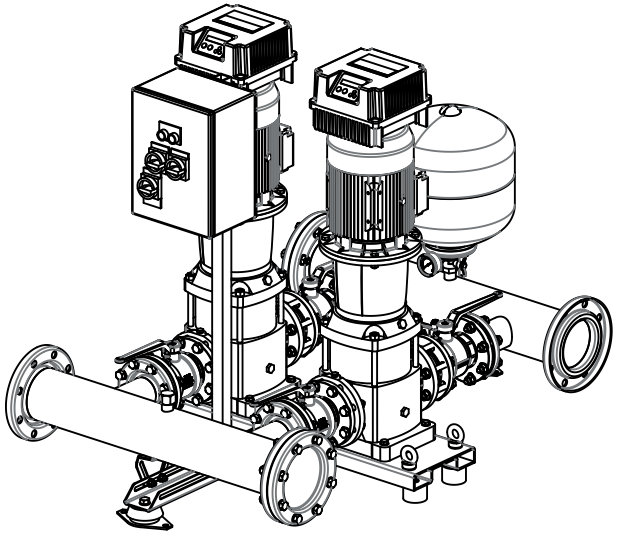

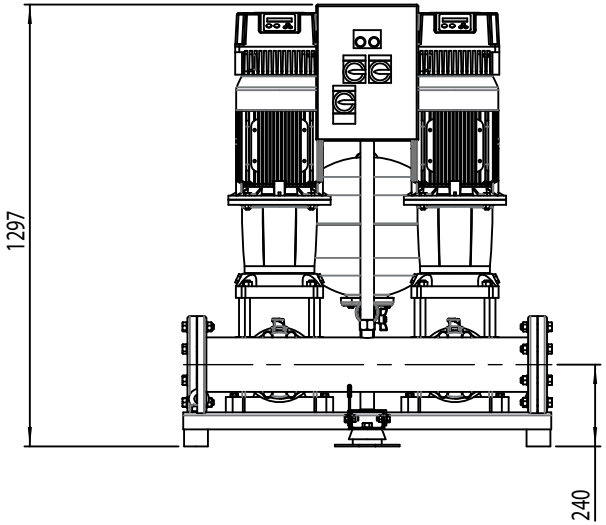

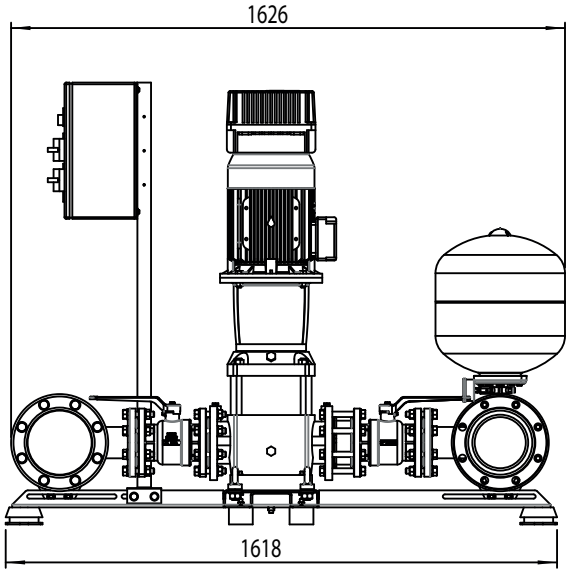

DN150 PN16 SUCTION

DN150 PN16 DISCHARGE

ALL DIMENSIONS IN MM UNLESS OTHERWISE STATED	THIRD ANGLE	DRAWING NUMBER: VMV2-15-5V075L01	REVISION 01
DO NOT SCALE DRAWING / IF IN DOUBT ASK	SHEET NO. 1 OF 1	DESCRIPTION: DUTYPOINT SYSTEMS BOOSTER SET	
PROPRIETARY AND CONFIDENTIAL	SCALE 1:16	DRAWN: MICHAEL COCKBURN	26/02/2020
SHEPHERD ROAD, GLOUCESTER GL2 5EL (T): 01452 300 110	SHEET SIZE: A3	APPR'D: JOHN FLORENCE	26/02/2020
	DRY WEIGHT: KG	RELE'D: Michael Cockburn	26/02/2020