IF IN DOUBT ASK

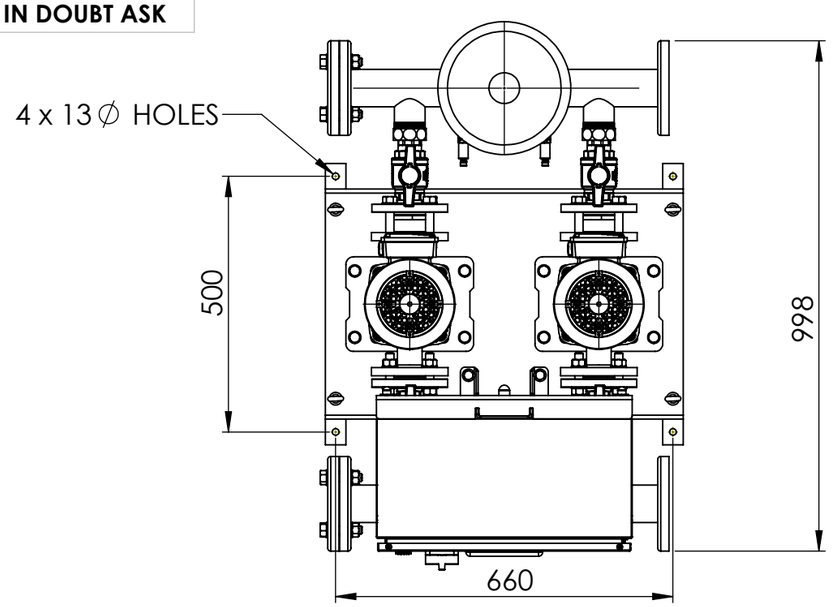

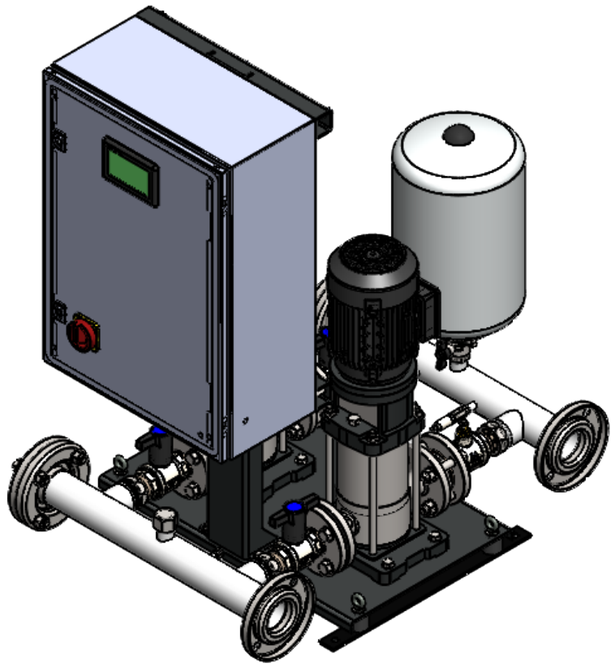

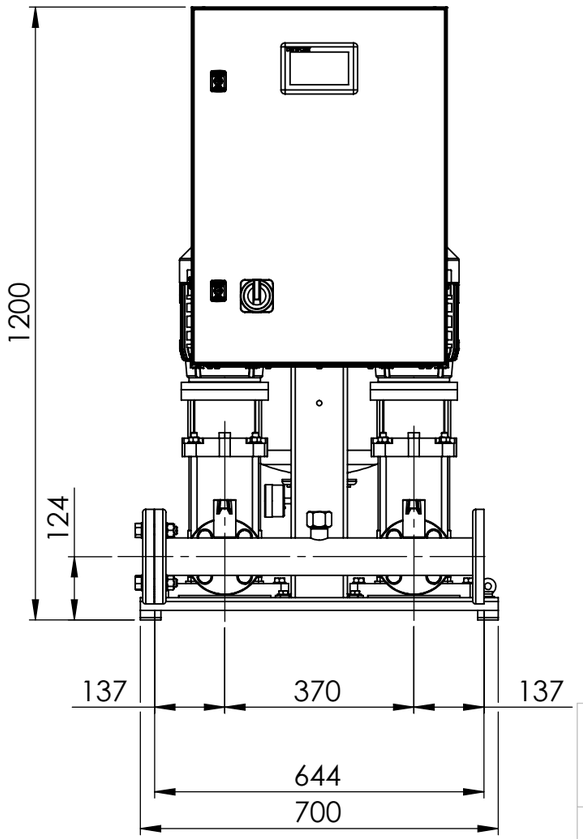

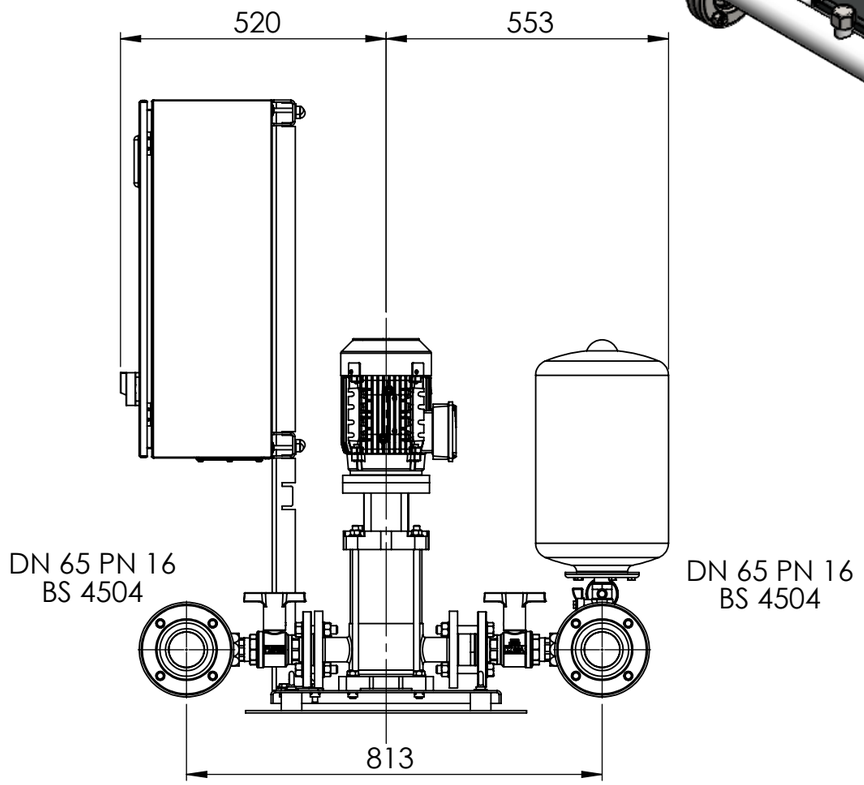

DUTYPOINT SETTING THE BAR

This drawing is the property of **DUTYPOINT**. Copyright is reserved by them and the drawing issued on the condition that it must not be used for any purpose other than that for which it is supplied and not to be copied, reproduced, retained or disclosed to any unauthorised person either wholly or in part without the consent in writing of **DUTYPOINT**

Shepherd Road, Gloucester
GL2 5EL (T): 01452 300 110

	NAME	DATE
DRAWN	Michael Cockburn	11 Jan 2019
CHK'D	Alex Lyon	16/01/2018
ISSU'D	-	-

UNLESS STATED DIMENSIONS ARE IN MILLIMETERS

FABRICATION	ABOVE 1000 ± 5.0 500 TO 1000 ± 3.0 125 TO 500 ± 1.5 0 TO 125 ± 0.75
ANGULAR	± 0° 30'
FLATNESS	ABOVE 1000 ± 3.0 500 TO 1000 ± 2.0 0 TO 205 ± 1.0
GA's & ASSEMBLIES	ABOVE 1000 ± 5.0 UP TO 1000 ± 3.0

DEBUR AND BREAK SHARP EDGES 0.2 MAX

IF IN DOUBT ASK

© ® **PAT PENDING**

THIRD ANGLE

NOTES

THERE MAY BE SLIGHT VARIATIONS IN MANIFOLD CENTRES DUE TO MANUFACTURING AND ASSEMBLY TOLERANCES

FINISH: -

MATERIAL:

WEIGHT:

DO NOT SCALE DRAWING | SHEET SIZE A3

CUSTOMER: -

TITLE:

VT2-10-022 BOOSTER SET

DWG NO. **VT2-10-022 Customer** REVISION 02

SCALE:1:12 | SHEET 1 OF 1