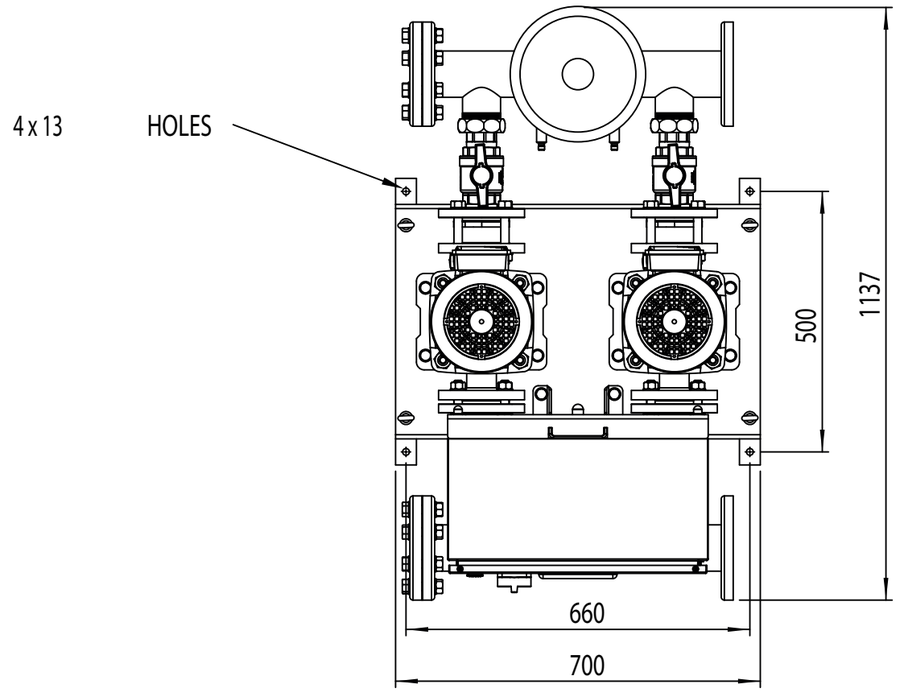

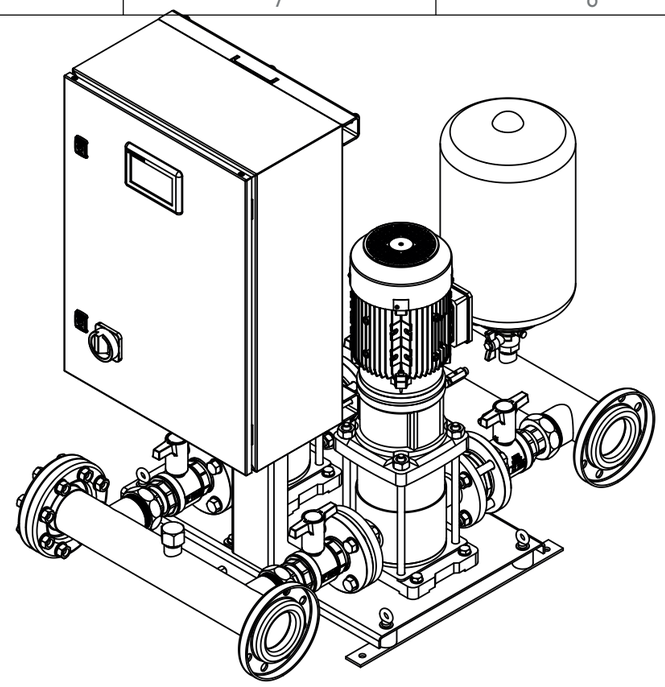

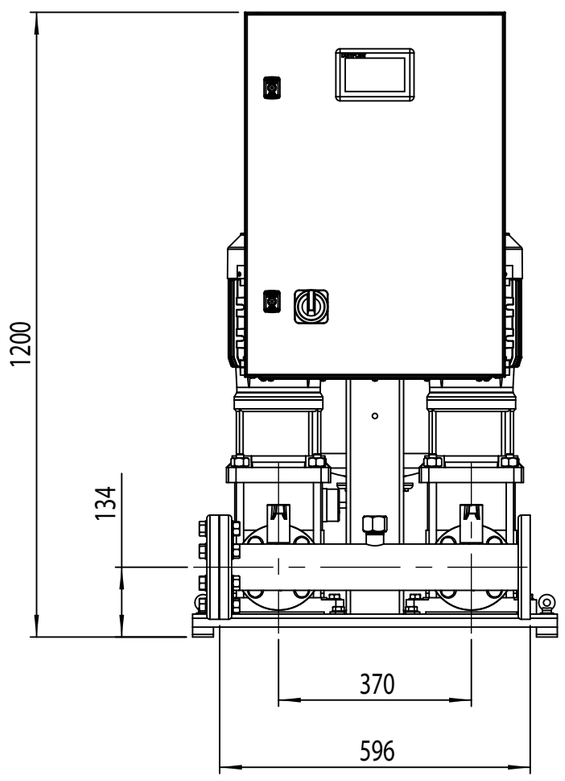

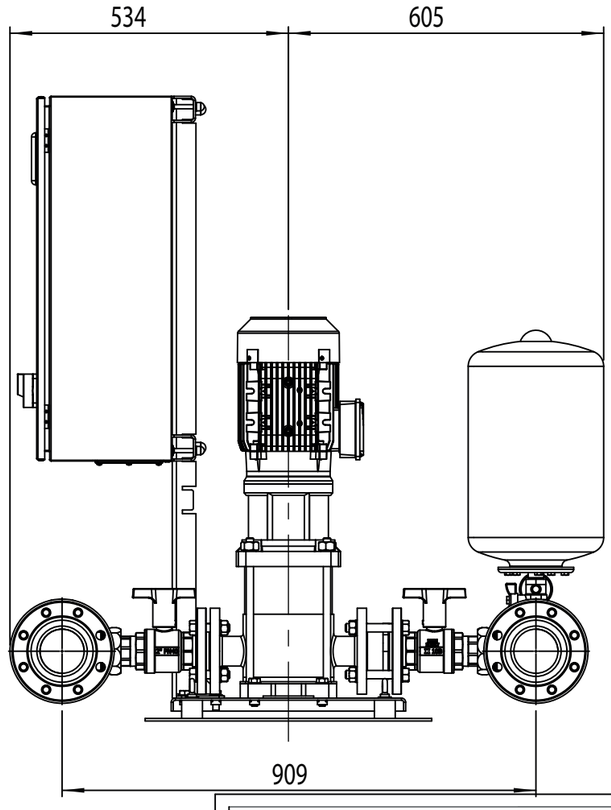

ALL DIMENSIONS IN MM UNLESS OTHERWISE STATED

THIRD ANGLE

DO NOT SCALE DRAWING | IF IN DOUBT ASK

PROPRIETARY AND CONFIDENTIAL

SHEPHERD ROAD, GLOUCESTER GL2 5EL
(T): 01452 300 110

SHEET NO. 1 OF 2

SCALE 1:12

SHEET SIZE: A3

DRY WEIGHT: KG

DRAWING NUMBER: VT2-15-030

REVISION: 01

DESCRIPTION:
DUTYPOINT WRAS APPROVED BOOSTER SET

DRAWN:	MICHAEL COCKBURN	01/10/2019
APPR'D:	JOHN FLORENCE	10/10/2019
RELE'D:	Michael Cockburn	10/10/2019