# WX RANGE

PRODUCT DATA SHEET

## WX1-5060-2250.A

**Product Description**

Dutypoint Systems WRAS Approved ScubaTANK – Combined storage tank and variable speed single pump booster set package featuring ultra-quiet constant-pressure operation. Free-standing unit comprising an insulated tank with approximately 2250 litres actual storage, stainless steel multistage submersible pump, inverter drive, smart tank level control system and common fault VFC. High level alarm is included within the common fault VFC as standard. Unit also includes isolation and non-return valve and pressure vessel and a 1.0 Inch high flow failsafe close motorised inlet ball valve.

| | |
|---|---|
| **WRAS** | ● **WRAS Approved**, All ScubaTANKs in the range have full WRAS approval. (WRAS Approval Number 2003810) |
| **Control System** | ● Live tank level display<br>● Common fault volt free contact, which includes alerts from pump fault, low water level and high water level.<br>● Ability to adjust tank usage volume via the controller keypad |
| **Protection** | ● **Anti-Seize** technology which rotates all pumps during low or zero usage and prevents the pumps from seizing up.<br>● **Low Water Protection** technology which deactivates the pumps if there is no water in the break tank, protecting against dry running. |
| **Variants** | ● **Remote Mounted Panel Variant .** Provides wall mounting options with the Vessel supplied loose for downstream installation.<br>● **Half Split Variant** Enables to the ability to split the ScubaTANK in half. This enables easy access for low door ways and tight spaces on route to its final installation location.<br>*please refer to separate information sheets for further details on these variant options |

## Specification

| | |
|---|---|
| Inlet connection | 1" |
| Delivery connection | 1.25" |
| Max operating flow (per pump) | 2.1 l/s |
| Max operating pressure | 5.9 bar |
| Closed Valve pressure | 6.7 bar |
| Maximum system pressure Rating | 10 bar |
| Speed | Variable |
| IP Rating | IP54 |
| Motor Power | 1.1 kW |
| Weight | TBA |
| Pressure Vessels N° x [Litres] | 1 x [12] |
| Maximum operating temperature* | 23 °C |

*For high temperature application please contact the office.

## Set Performance

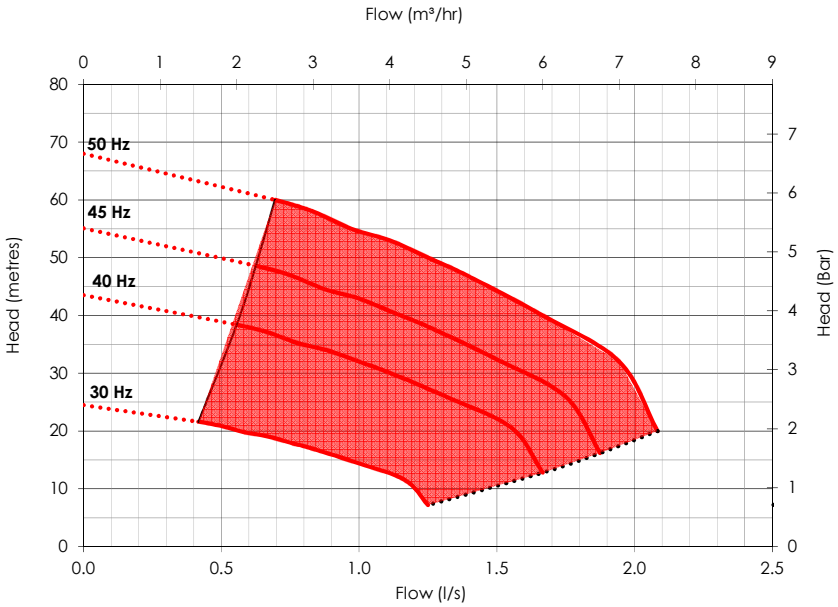


DUTYPOINT

www.dutypoint.com

Document # DOC-11830 Revision : 1

Specifications and illustrations are subject to revision without notice. Dutypoint Ltd is not liable for any incompleteness or inaccuracies.

# WX RANGE

PRODUCT DATA SHEET

## Electrical Data

| | |
|---|---|
| Voltage/Phase/Frequency | 230/1/50 |
| Operating speed range | 30 - 50Hz |
| Per pump Current @ Full Load | 7.4 A |
| Total Current @ Full Load | 7.4 A |

## WX model Codes

**WX1-5060-2250.A**

- Number of pumps
- Pump size
- Tank Size (litres)
- Fluid Category

## Technical Drawing

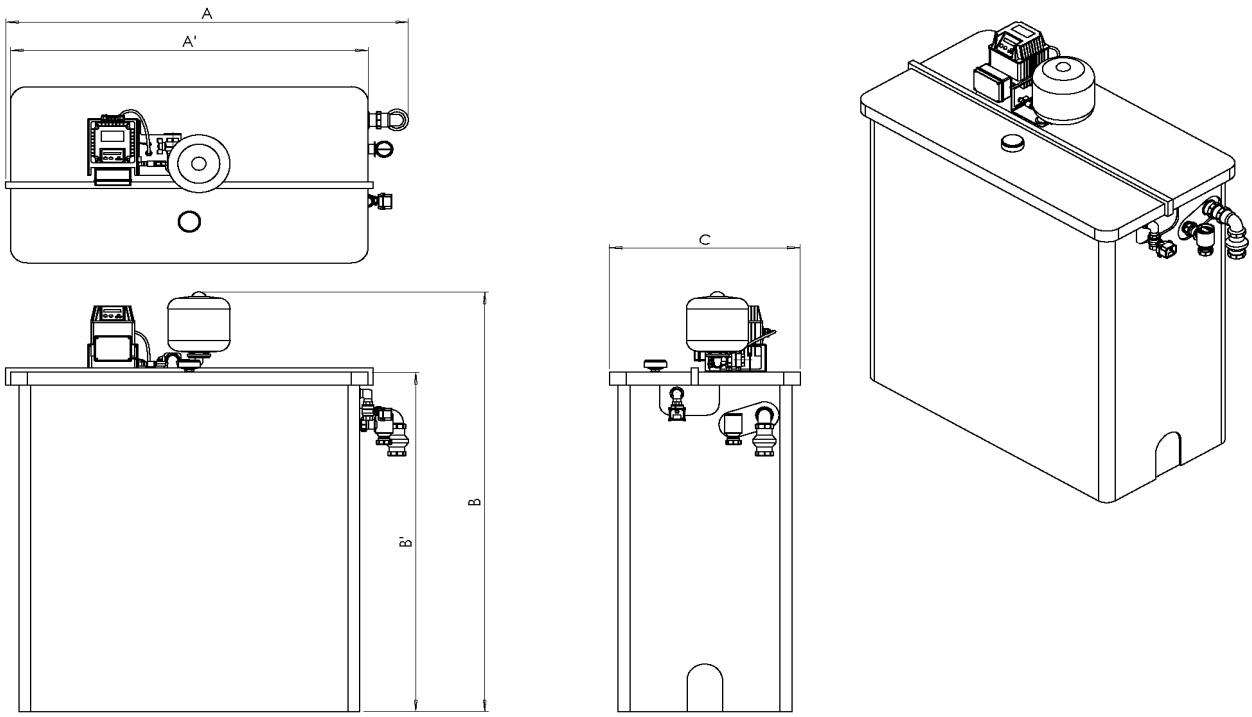


## Drawing dimensions

| | |
|---|---|
| Dimension A | 2188 |
| Dimension A' | 2000 |

| | |
|---|---|
| Dimension B | 1962 |
| Dimension B' | 1540 |
| Dimension C | 1160 |

WRAS APPROVED PRODUCT CERTIFICATION MARK

UK CA

CE

DUTYPOINT

www.dutypoint.com



Specifications and illustrations are subject to revision without notice. Dutypoint Ltd is not liable for any incompleteness or inaccuracies.