WX RANGE

PRODUCT DATA SHEET

WX1-9040-490.A

Product Description

Dutypoint Systems WRAS Approved ScubaTANK – Combined storage tank and variable speed single pump booster set package featuring ultra-quiet constant-pressure operation. Free-standing unit comprising an insulated tank with approximately 490 litres actual storage, stainless steel multistage submersible pump, inverter drive, smart tank level control system and common fault VFC. High level alarm is included within the common fault VFC as standard. Unit also includes isolation and non-return valve and pressure vessel and a 1.0 Inch high flow failsafe close motorised inlet ball valve.

WRAS	• **WRAS Approved**, All ScubaTANKs in the range have full WRAS approval. (WRAS Approval Number 2003810)
Control System	• Live tank level display • Common fault volt free contact, which includes alerts from pump fault, low water level and high water level. • Ability to adjust tank usage volume via the controller keypad
Protection	• **Anti-Seize** technology which rotates all pumps during low or zero usage and prevents the pumps from seizing up. • **Low Water Protection** technology which deactivates the pumps if there is no water in the break tank, protecting against dry running.
Variants	• **Remote Mounted Panel Variant .** Provides wall mounting options with the Vessel supplied loose for downstream installation. • **Half Split Variant** Enables to the ability to split the ScubaTANK in half. This enables easy access for low door ways and tight spaces on route to its final installation location. *please refer to separate information sheets for further details on these variant options

Set Performance

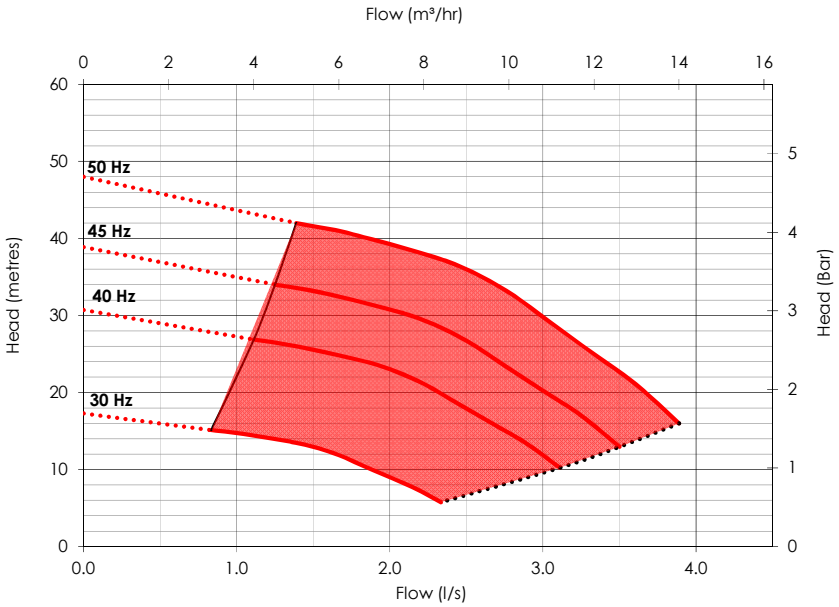

Specification

Inlet connection	1"
Delivery connection	1.25"
Max operating flow (per pump)	3.9 l/s
Max operating pressure	4.1 bar
Closed Valve pressure	4.7 bar
Maximum system pressure Rating	10 bar
Speed	Variable
IP Rating	IP54
Motor Power	1.5 kW
Weight	TBA
Pressure Vessels N° x [Litres]	1 x [24]
Maximum operating temperature*	23 °C

*For high temperature application please contact the office.

DUTYPOINT

www.dutypoint.com

Specifications and illustrations are subject to revision without notice. Dutypoint Ltd is not liable for any incompleteness or inaccuracies.

WX RANGE

PRODUCT DATA SHEET

Electrical Data

Voltage/Phase/Frequency	230/1/50
Operating speed range	30 - 50Hz
Per pump Current @ Full Load	6.3 A
Total Current @ Full Load	6.3 A

WX model Codes

WX1-9040-490.A

- Number of pumps
- Pump size
- Tank Size (litres)
- Fluid Category

Technical Drawing

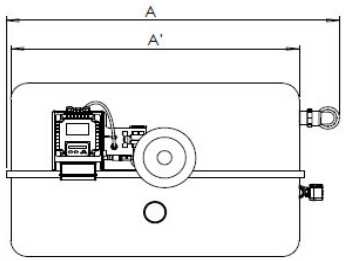

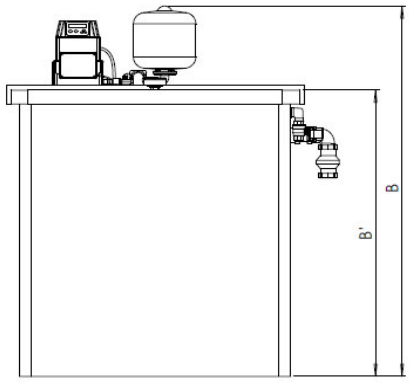

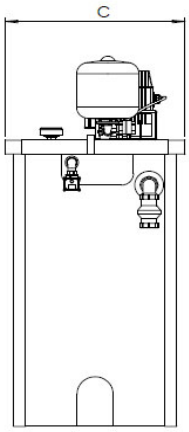

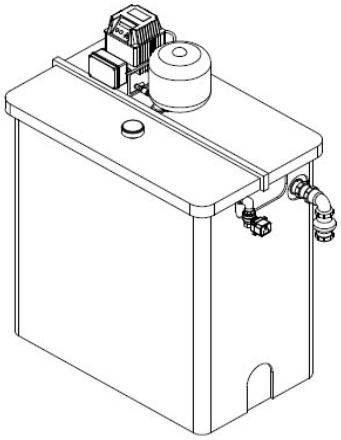

Drawing dimensions

Dimension A	1138
Dimension A'	950

Dimension B	1749
Dimension B'	1240
Dimension C	750

WRAS APPROVED PRODUCT CERTIFICATION MARK

UK CA

CE

DUTYPOINT

www.dutypoint.com

Specifications and illustrations are subject to revision without notice. Dutypoint Ltd is not liable for any incompleteness or inaccuracies.