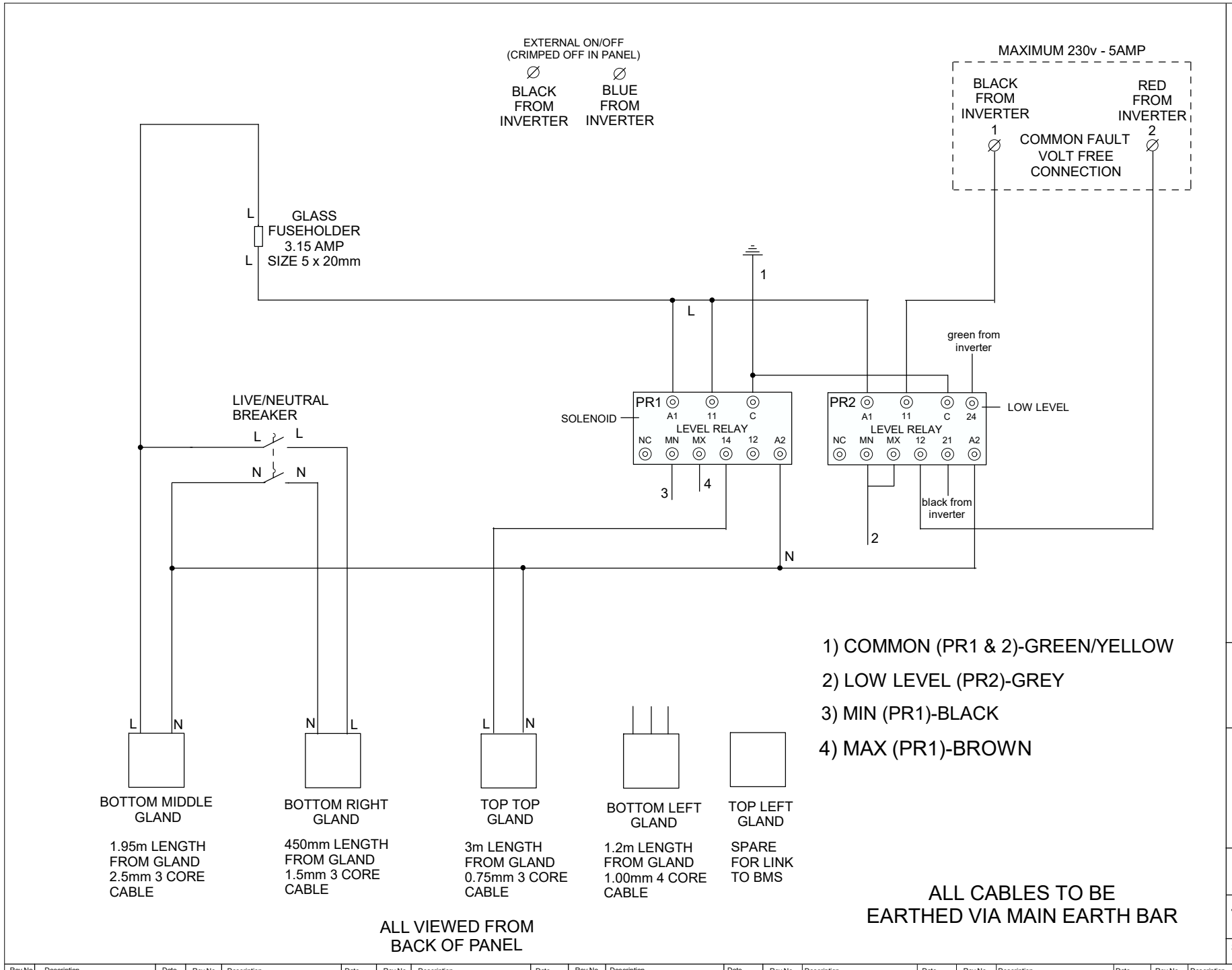

SINGLE

Drawing No	Drawn by
P150691	G.L.
Job No	Checked by T.B.
Sheet No 1 / 1	Date 01/12/15

Rev No	Description	Date	Rev No	Description	Date	Rev No	Description	Date	Rev No	Description	Date	Rev No	Description	Date	Rev No	Description	Date	Rev No	Description	Date