- IMPORTANT: The tank must be surrounded in concrete as per installation procedures. Refer to installation manual available from Dutypoint Ltd.
- Inlets and cable entry points to be formed in the correct positions to suit site requirements. Further detail is available in the installation manual
- Dimensions are approximate due to manufacturing tolerances. If critical, check physically prior to installation.

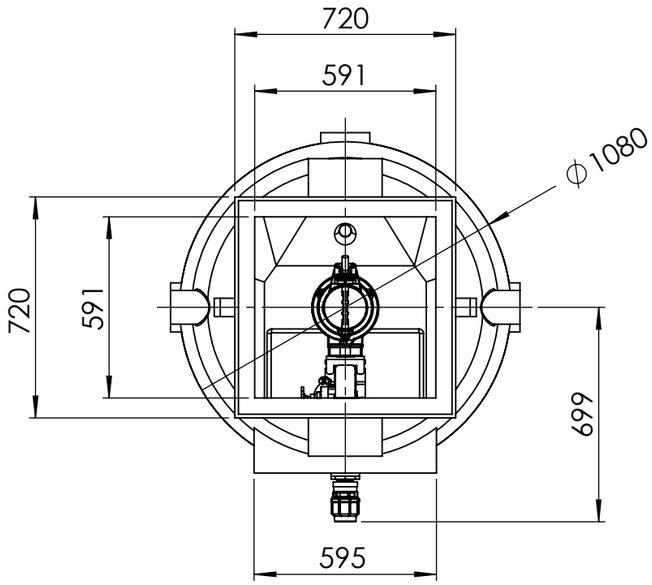

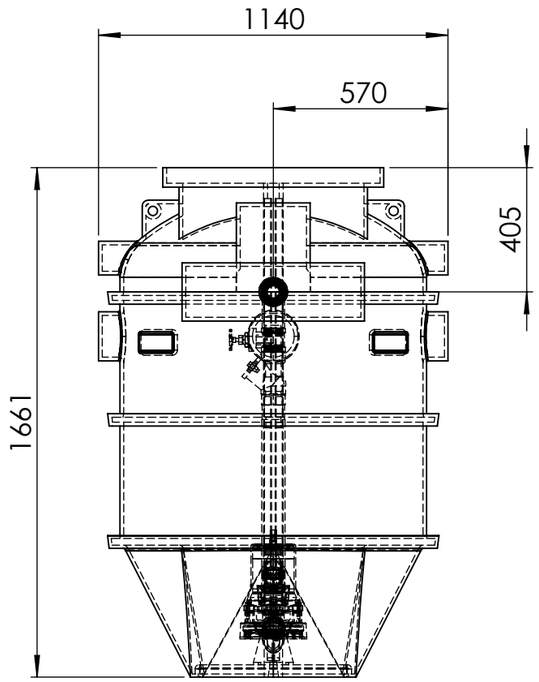

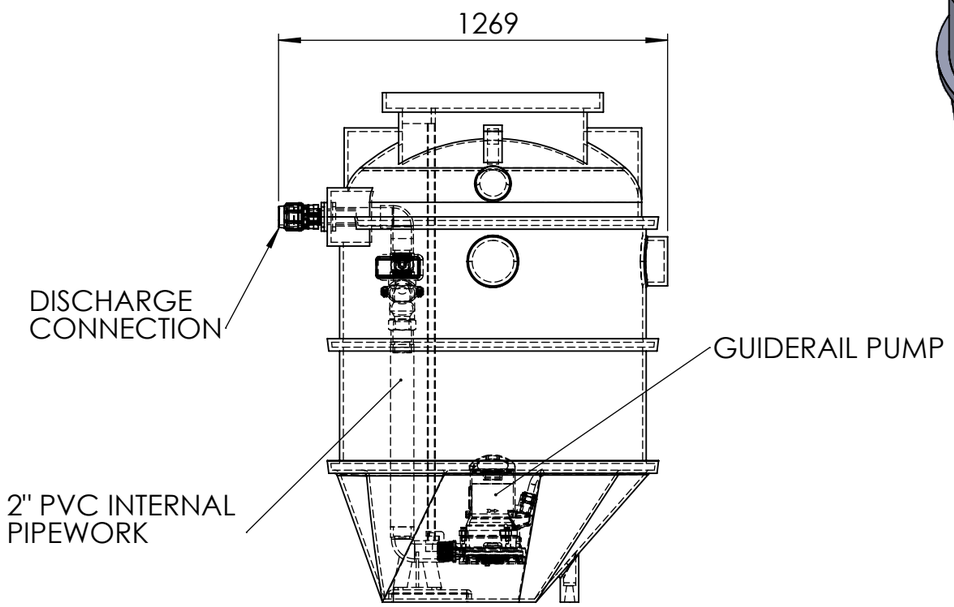

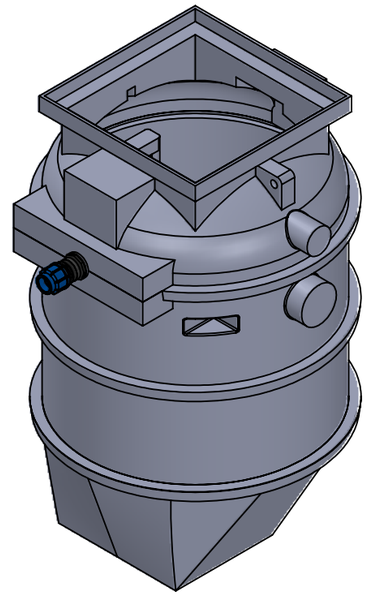

CUSTOMER:	
PRINT NAME:	
DATE:	
SIGNATURE:	

DUTYPOINT SETTING THE BAR

SHEPHERD ROAD, GLOUCESTER GL2 5EL
(T): 01452 300 110

PROPRIETARY & CONFIDENTIAL
DO NOT SCALE THIS DRAWING
IF IN DOUBT

THIRD ANGLE

DRAWING NO:	10-005062-000		REV:	02.00
BIM NO:	XXX-XXX-XX-XX-XX-X-XX_XX_XX-XXXX-XX-XXX			
DESCRIPTION:	T10.160.1P.50.GR			
PROJECT NAME:				
MODEL NO.				
SERIAL NO.			SHEET NO.	1 OF 1
PROJECT NO.			SCALE:	1:20
DRAWN BY:	DARREN LUSTY	26/04/2022	SHEET SIZE:	A3
APPROVED BY:	-	-	WEIGHT KG:	